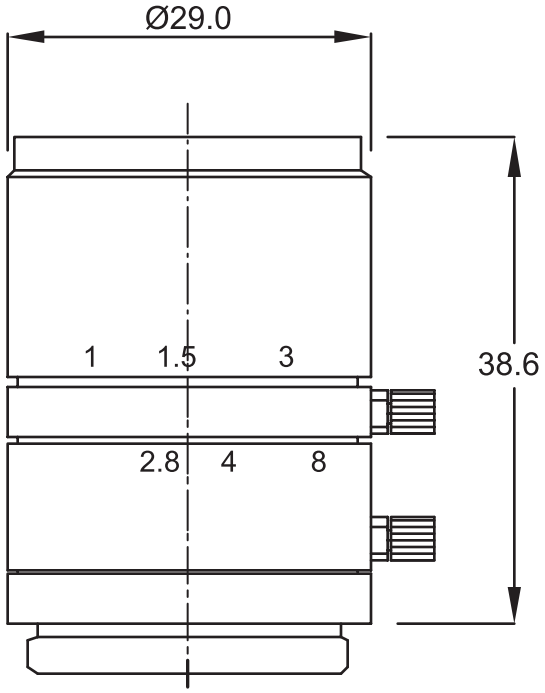
Ø29.0
38.6
1
1.5
3
2.8
4
8