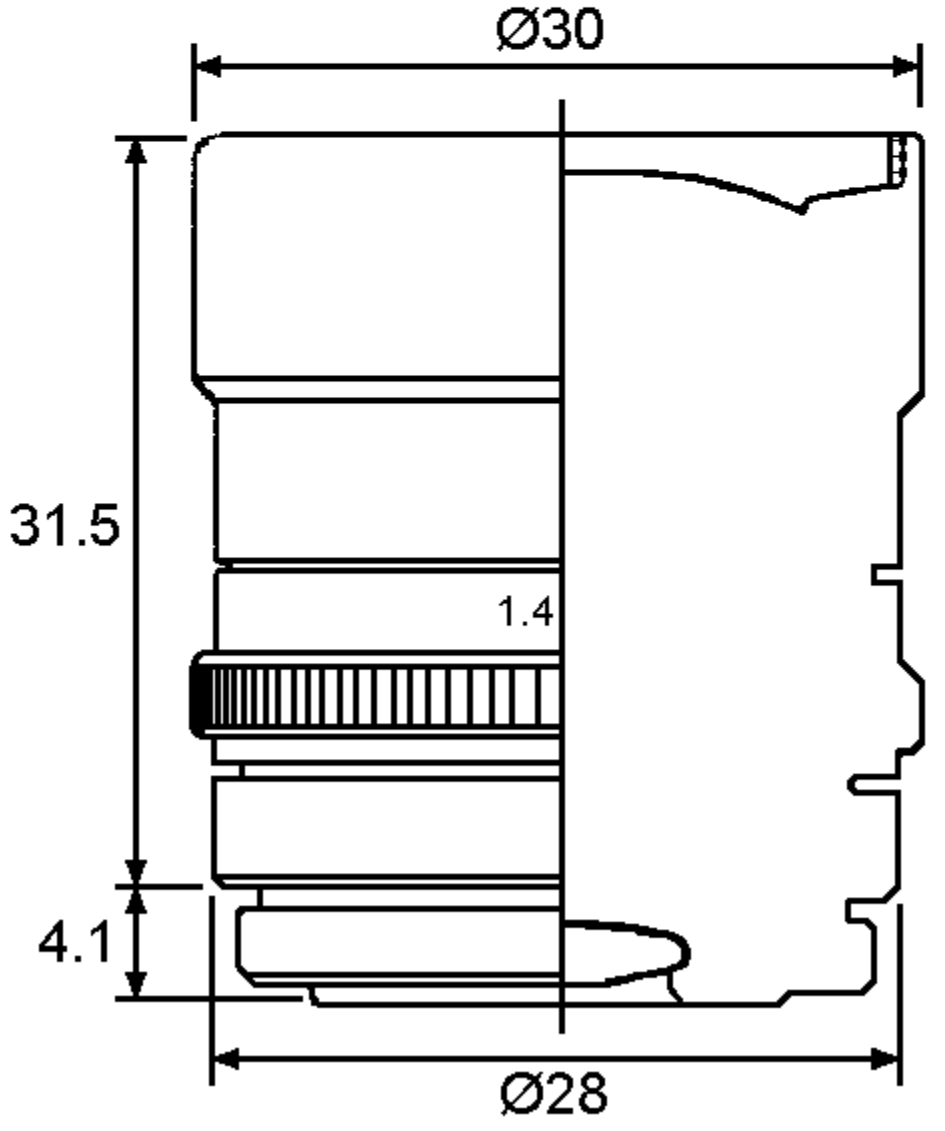CCTV Lens DO-2814